SCS Cases 8401 73rd Ave. North, Suite 63 Brooklyn Park, MN 55428 www.scscases.com 1-800-544-5395

REV.	E.C.O.	DESCRIPTION	BY/DATE	APVD.

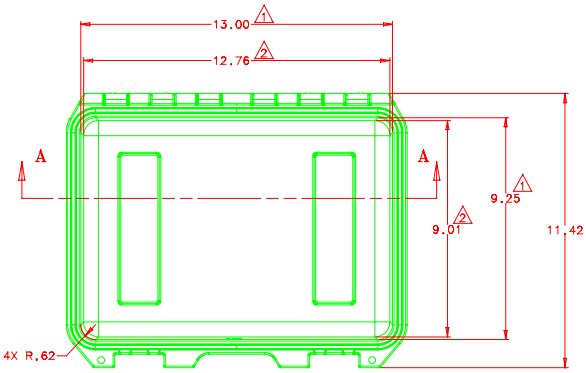

TOP VIEW
SHOWN WITH LID REMOVED

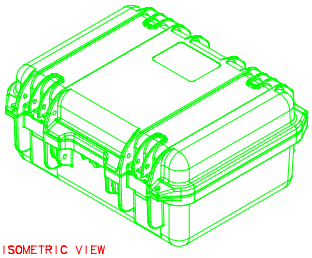

ISOMETRIC VIEW

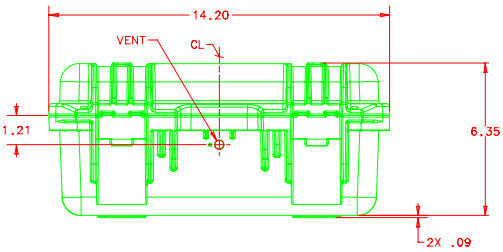

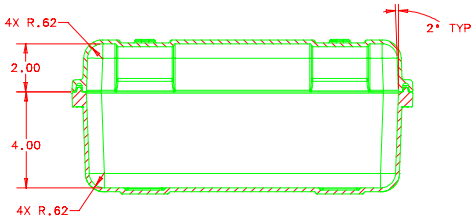

SECTION A–A

NOTES:

1. INTERIOR DIMENSION TAKEN AT PARTING LINE
2. INTERIOR DIMENSION TAKEN NEAR BOTTOM OF BASE, AT TOP OF .62 RADIUS
3. THIS DRAWING INTENDED TO BE USED FOR SIZING FOAM CUSHIONING, COMPLETE CASE ASSEMBLY NOT SHOWN. SHELLS NOT SOLD SEPARATELY.
4. THIS DRAWING AND ALL COPIES AND THE DESIGN AND DATA SHOWN ARE THE PROPERTY OF HARDIGG INDUSTRIES, INC. SO. DEERFIELD, MA U.S.A. AND INCLUDE PROPIETARY INFORMATION.

NEXT ASSY.
TOLERANCE UNLESS OTHERWISE SPECIFIED .XX ±.03 .XXX ±.01 ANGLE ±1°
DR. APONTE DATE 7-20-00 ENGR. DATE
CHKD. DATE APVD. DATE

This drawing and all copies and the design and data shown are the property of Hardigg Industries, Inc. Specifications, data, drawings, and information contained herein are to be used only as required for Hardigg Industries, Inc. business and shall not be reproduced or disclosed to any other person or company without the express written consent of Hardigg Industries, Inc. It will not be the drawing or any copy of the design or data shown (or any reproduction thereof) or any other information contained herein, directly or indirectly, to any other person or company or utilize the drawing or any copy of the design or data shown on the drawing, or reproduce and or manufacture duplicate therefrom.

TM HARDIGG INDUSTRIES, INC.
SOUTH DEERFIELD, MASSACHUSETTS 01373

TITLE DIMENSION ASSY, IM2100 (SHELL)

SIZE	CAGE	DWG. NO.	REV.
D	11214	P111-109	–

SCALE 1/2 DESIGN NO. P111